CENTRAL POLYTECHNIC COLLEGE.

THARAMANI, CHENNAI-600 113.

PROJECT WORK REPORT

2023-2024

Project work, submitted in partial for the requirement for the
Diploma in Marine Engineering by
Directorate of Technical Education,
Chennai-600 023
Tamil Nadu.

DEPARTMENT OF MARINE ENGINEERING

SHIP RUDDER'S

PROJECT REPORT

FEBRUARY-2024

A report submitted to the

DEPARTMENT OF MARINE ENGINEERING

In partial fulfilment of the requirements for the award of

DIPLOMA IN MARINE ENGINEERING

SUBMITTED BY

BATCH NO: 04 **SEM:** VI

PROJECT MEMBERS		REGISTER NUMBER
1	NITHESWAR.R	601121011
2	OBED KEVIN.R	601121012
3	DHINAKAR.M	601122501
4	EDWIN GNANARAJ.H	601122502

UNDER THE GUIDANCE OF

Mr. SATHISH KUMAR.N ., B.Tech

CENTRAL POLYTECHNIC COLLEGE, CHENNAI-600 113

DIRECTORATE OF TECHNICAL EDUCATION

CENTRAL POLYTECHNIC COLLEGE

THARAMANI, CHENAI-600113

DEPARTMENT OF MARINE ENGINEERING

PROJECT REPORT 2022-2023

Register No. …….

BONAFIDE CERTIFICATE

Certify that is the bonafide project work done by.....

SHIP RUDDER'S

In partial fulfilment of the requirements for the award of the **Diploma in Marine Engineering**, during the 2023-2024

Project Guide Head of the Department

Submitted for the Board Examination held at Central Polytechnic College

Chennai-600113 on……..

Internal Examiner External Examiner

ACKNOWLEDGEMENT

We express our sincere thanks to our beloved Principal Thiru.**Dr.E.M.SRINIVASAN.M.E.Ph.D.** for encouraging us to do this project work successfully.

We would like to place on record my deep sense of gratitude to **Thiru. N SIVAKUMAR.M.E.** Head of Department, Marine Engineering for his generous guidance, help and useful suggestions.

We express my sincere gratitude to our Guide **Mr. SATHISH KUMAR.N. B.Tech** Department of Marine Engineering, for his stimulating guidance, continuous encouragement throughout the course of present work.

Finally, our thanks to all faculty members of Marine Engineering Department, Central Polytechnic College.

CONTENTS

S.NO	CONTENT	PAGE NO
1	ABSTRACT	6
2	INTRODUCTION	7
3	WORKING PRINCIPLE	8
4	MAJOR PARTS	10
5	APPLICATION	13
6	ADVANTAGES AND DISADVANATGES	14
7	COST ESTMISATION	17
8	CONCLUSION	18

FIGURE'S

S.NO	CONTENT	FIG NO	PAGE NO
1	SCHEMATIC DIAGRAM	FIG 1	9
2	RUDDER BEARING	FIG 2	12
3	BALANCED RUDDER	FIG 3	14
4	UNBALANCED RUDDER	FIG 4	15
5	SEMI BALANCED RUDDER	FIG 5	16

CHAPTER 1

ABSTRACT:

A ship's rudder is a hydrofoil that pivots on a vertical axis and is located at the stern behind the propeller. The rudder is a primary control surface used to steer the ship. When turned, the rudder causes the vessel's head to turn in the same direction.

The rudder works by deflecting the water flow to the direction of the foil plane. The rudder moves in the direction of lower pressure. As the rudder goes, so goes the stern, and the ship turns.

The rudder is fastened outside the hull, usually at the stern. The rudder shaft is often made of stainless steel 316 because it is non -corrosive, relatively strong, and widely available. Other materials used for rudder shafts include aluminum and high strength stainless steel.

Rudders are termed balanced, semi-balanced or unbalanced. The other method of categorization is the arrangement for suspending the rudder from the hull. Some have a pantie at the bottom of the rudder, others one at about mid-depth and others have no lower pantie.

The type of rudder that would suit a particular ship is a decision that needs to be based on various factors like hull form, speed, propeller design, the structural arrangement of the stern, clearance between the propeller and the stern, and also a few hydrodynamic factors that dictate the flow of water aft of the propeller.

Rudders are essential for navigation and steering and help keep the ship stable and safe while it is at sea.

CHAPTER 2

INTRODUCTION:

The rudder is used to steer the ship. The turning action is largely dependent on the area of the rudder. The required area of the rudder varies with different type of vessels since desired maneuvering ability differs considerably and the general ship design may impose restriction.

In practice the rudder area is usually relative to the area of the immersed metal plane. The ratio of the depth to width of a rudder is known as the aspect ratio and its value is generally 2. High aspect ratio is used in large vessels, where depth is not a constraint. Higher aspect ratio reduces the astern torque considerably.

TYPES OF RUDDER

BALANCED RUDDERL:

- When 20% to 37% of the area is forward of the turning axis there is no torque on the rudder stock at certain angles.
- At some angle of rudder, it is balanced. i.e., torque is zero, to keep rudder at that angle.
- Axis of rotation lies between 0.2 L and 0.37 L.

SEMI-BALANCED RUDDER:

- A rudder with a small part of its area, less than 20%, forward of the turning axis.
- At no angle rudder is balanced.
- Axis of rotation lies less than 0.2 L.

UNBALANCED RUDDER:

- A rudder with all of its area aft of the turning axis.
- At no angle rudder is balanced.
- Axis of rotation is the leading edge.

CHAPTER 3

WORKING PRINCIPLE:

The rudder is operated using steering gear which provides a movement of the rudder in response to a signal from the bridge. The total system may be considered made up of three parts, control equipment, a power unit and a transmission to the rudder stock. Rudders operate on the principle of unequal water pressures. When the rudder is turned so that one side is more exposed to the force of the water flowing past it than the other side, the stern will be thrust away from the side that the rudder is on and the boat will swerve from its original course. A device used for steering and manoeuvring a vessel. Rudders are hydrofoils which are pivoting on a vertical axis. They are located normally at the stern behind propeller(s) to produce a transverse force and steering moment about the ship center of gravity by deflecting the water flow to the direction of the foil plane.

RUDDER EFFECTIVENESS :

● Rudder arrangement in the propeller stream.

● increasing the rudder area.

● Steering gear which allows larger rudder angles than the customary 35°.

● shorter rudder steering (more powerful hydraulic pumps in steering gear).

SCHEMATIC DIAGRAM

ALL MEASUREMENTS IN INCHES

RUDDER = 8 INCH

CLEARANCE = 6 INCH

LENGTH = 28 INCH

HEIGHT = 20 INCH

BREADTH = 15 INCH

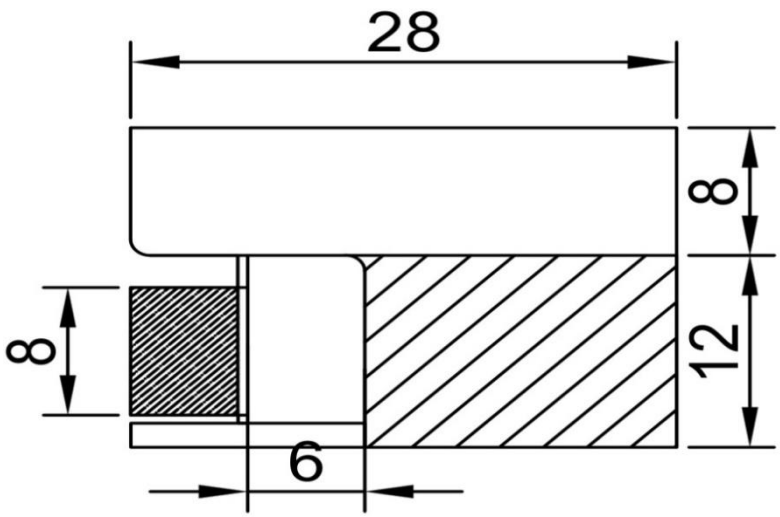

Fig:1

CHAPTER 4

MAJOR PARTS:

A rudder is consists of the following main parts:

- Rudder
- Rudder Stork
- Rudder bearing
- Rudder trunk
- Aft
- Lever
- Propeller
- Connecting rod

RUDDER CONSTRUCTION :

Modern rudders are of streamlined form except those on small vessels, and are fabricated from steel plate, the plate sides being stiffened by internal webs. Where the rudder is fully fabricated, one side plate is prepared and the vertical and horizontal stiffening webs are welded to this plate. The other plate, often called the 'closing plate', is then welded to the internal framing from the exterior only. This may be achieved by welding flat bars to the webs prior to fitting the closing plate, and then slot welding the plate . Other rudders may have a cast frame and webs with welded side and closing plates. Minor features of the rudders are the provision of a drain hole at the bottom with a plug, and a lifting hole that can take the form of a short piece of tube welded through the rudder with doubling at the side and closing plates.

RUDDER PINTLES:

Pintles on which the rudder turns in the gudgeons have a taper on the radius, and a bearing length that exceeds the diameter. Older ships may have a brass or bronze liner shrunk on the pintles, which turn in lignum vitae (hardwood) bearings fitted inthe gudgeons. Modern practice is to use synthetic materials or composites for the bearings, and in some cases stainless steels for the liners. In either case lubrication of the bearing is provided by the water in which it is immersed. For many years it has not been found practicable to provide oil-lubricated metal bearings for the pintles, but a number of larger ships now have this innovation.

RUDDER STOCK:

Rudder stock may be of cast or forged steel, and its meter is determined in accordance with the torque and any bending moment it is to withstand. At its lower end it is connected to the rudder by a horizontal or vertical bolted coupling, the bolts having a cross-sectional area that is adequate to withstand the torque applied to the stock. This coupling enables the rudder to be lifted from the pintles for inspection and service.

RUDDER BEARING:

The weight of the rudder may be carried partly by the lower pintle and partly by a rudder bearer within the hull. In some rudder types, for example the spade type that is only supported within the hull, the full weight is borne by the bearer. A rudder bearer may incorporate the watertight gland fitted at the upper end of the rudder trunk. Most of the rudder’s weight may come onto the bearer if excessive wear-down of the lower pintle occurs, and the bearers illustrated have cast iron cones that limit their wear-down.

RUDDER BEARING:

Fig:2

RUDDER TRUNK:

Rudder stocks are carried in the rudder trunk, which as a rule is not made watertight at its lower end, but a watertight gland is fitted at the top of the trunk where the stock enters the intact hull. This trunk is kept reasonably short so that the stock has a minimum unsupported length, and may be constructed of plates welded in a box form with the transom floor forming its forward end. A small opening with watertight cover may be provided on one side of the trunk, which allows inspection of the stock from inside the hull in an emergency.

CHAPTER 5

APPLICATION:

BALANCED RUDDER:

A balanced rudder is a rudder in which the axis of rotation of the rudder is behind its front edge. This means that when the rudder is turned, the pressure of water caused by the ship's movement through the water acts upon the forward part to exert a force which increases the angle of deflection, so counteracting the pressure acting on the after part, which acts to reduce the angle of deflection.

UNBALANCED RUDDER:

In an unbalanced rudder the steering gear has to provide all the turning torque. The blade on the other hand is exposed to large bending moments. Thus unbalanced rudder is not widely used in modern ships but its popular among small vessels and fishing boats.

SEMI BALANCED RUDDER:

Semi balanced ship rudder find application in various types of ships cargo ships utilize this types of rudder to improved steering maneuverability and overall control of the vessel. Passengers ship benefit from semi balanced rudder to enhance safety and provide a smooth sailing experience for travels .container ships incorporate these rudders efficient navigation and precise course corrections tanked rely on semi balanced rudders to optimize stability and enhanced steering responsiveness .

CHAPTER 6

FABRICATION OF SHIP'S RUDDER

BALANCED RUDDER WORKING PRINCIPLE:

ADVANTAGES:

- This allows the rudder to be moved with less effort than is necessary with an unbalanced rudder.
- However, it is more common on smaller ships as the torque is insufficient for heavier ships.

DISADVANTAGES:

- Researchers and ship operators had found significant problems with the balanced and unbalanced rudders.
- That is, in case there was a failure of the steering gear mechanism while turning a ship. The rudder would remain still with its angle of attack in that condition.

BALANCED RUDDER

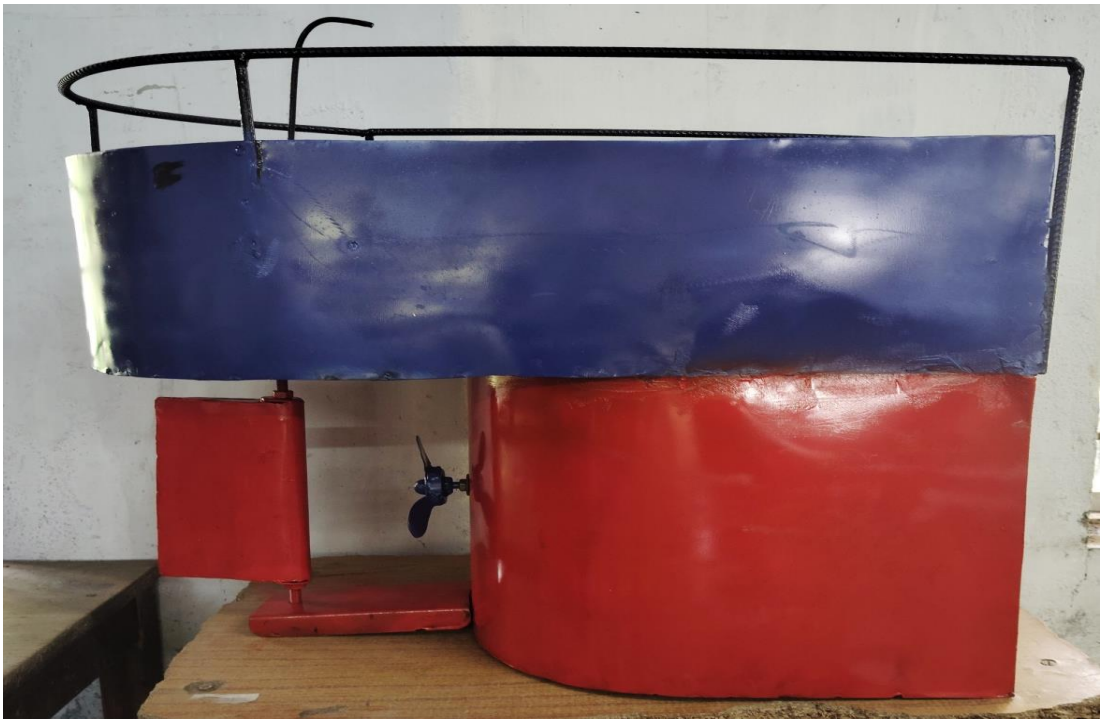

Fig:3

UNBALANCED RUDDER WORKING PRINCIPLE:

ADVANTAGES:

- The top part being unbalanced will help in acting as structural support to the rudder from vertical displacement. And the balanced part will render less torque in swinging the rudder.
- As a result, a semi-balanced rudder returns to the centerline orientation on its own if the steering gear equipment fails during a turn.

DISADVANTAGE:

- In this case, the torque required to turn the rudder is way higher than what is required for a corresponding balanced rudder.
- So, the topmost part of the rudder has to be fixed to the spindle so as to prevent it from vertical displacement from its natural position.

UNBALANCED RUDDER

Fig:4

SEMI-BALANCED:

ADVANTAGES:

- A degree of semi-balance is normal to avoid rudder instability.
- The area in front of the pivot is less than that behind. This allows the rudder to be moved with less effort than is necessary with an unbalanced rudder.
- However, it is more common on smaller ships as the torque is insufficient for heavier ships.

SEMI BALANCED RUDDER:

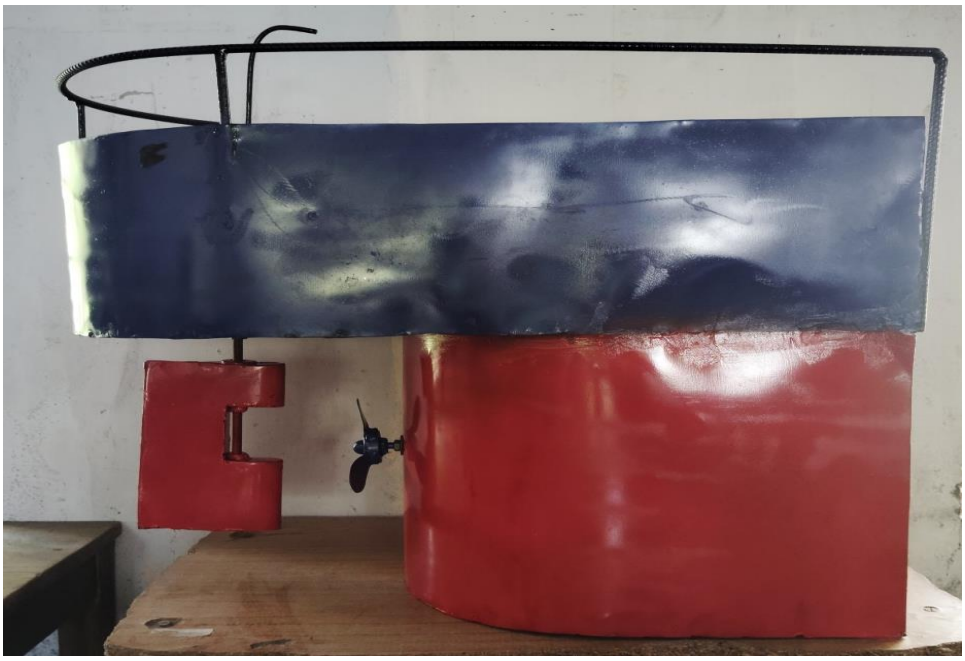

Fig:5

CHAPTER 7

COST ESTIMATION

MATERIALS USED

S.NO	DESCRIPTION	QUANTITY
1	MILD STEEL PLATE (MS)	1 no.s
2	STEEL ROD (36 INCH)	2 no.s
3	RUDDER STOCK (2 INCH)	1 no.s
4	BEARING (1)	1 no.s
5	M-SEAL	2 packs
6	LINK SYSTEM	1 no.s
7	REGULATOR	1 no.s

MATERIALS COST:

S.NO	DESCRIPTION	COST
1	STEEL	₹3,000.00
2	BEARINGS (6)	₹1,200.00
3	CONNECTING ROD (3M)	₹500.00
4	PAINTS	₹1,300.00
5	BRUSH	₹100.00
6	NUT (10)	₹100.00
TOTAL		**₹6,200.00**

LABOUR COST

FABRICATION COST, PAINTING COST, WELDING COST

COST = Rs. 2,000/-

TOTAL COST

TOTAL COST = MATERIAL COST+ LABOUR COST = Rs.6,200 + 2,000

TOTAL COST FOR THIS PROJECT = **Rs. 8,200/**

CONCLUSION

The research to analyses the best rudder system in the sea going vessel. As we analyses the semi balanced rudder is the best of all types and semi balanced rudder is used in most in the ship.

A semi balanced rudder has a shorter vertical section forward of the stock thus less counterbalanced than the balanced rudder but more than the unbalanced rudder the semi balanced rudder often need more torque than the balanced rudder and it is a very widely used kind of rudder for modern tonnage especially for the container type vessel and twin screw vessel.

Rudders are underwater blades that are positioned at the stern of a ship. They are controlled by a helm and when turned, cause the vessel's head to turn in the same direction.

Control: Rudders maintain control, even in windy conditions.

Yawing: Rudders reduce the yaw, which is the left and right nodding of the bow.

Straight path: Rudders help keep boats on a straight path.

Propeller thrust: Rudders affect propeller thrust efficiency.

Ship resistance: Rudders affect total ship resistance.

Transport efficiency: Rudders are important to transport efficiency.

The rudder works by deflecting the water flow to the direction of the foil plane. The rudder moves in the direction of lower pressure. As the rudder goes, so goes the stern, and the ship turns.